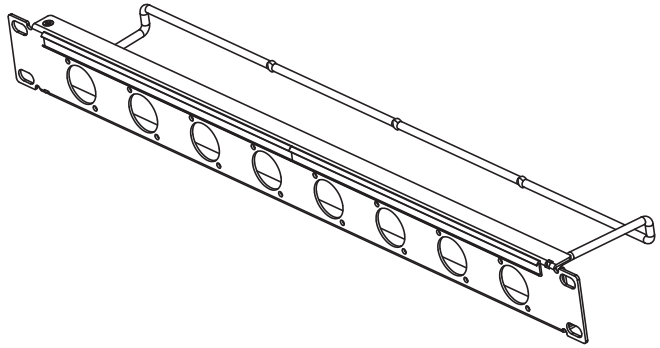

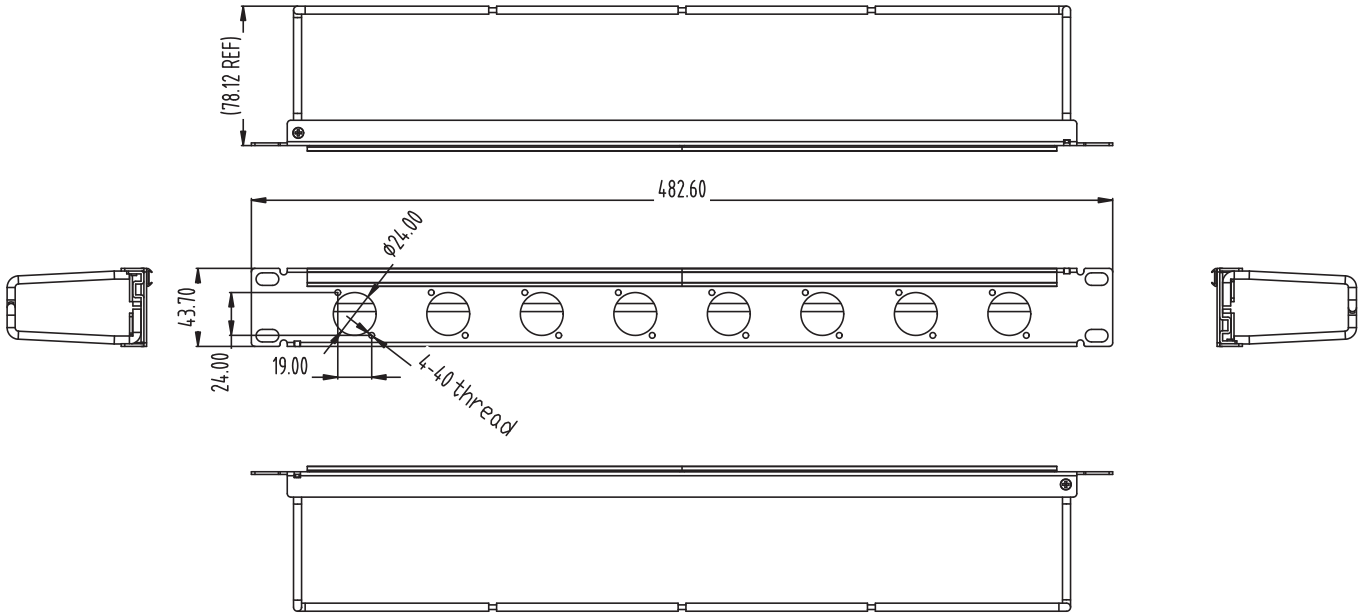

Material: SPCC

Dat	2024 / 06 / 11	Title: 19″ D-Type Patch Panel with strain relief 8 port 1U black	
Unit	mm	Item no.	67059
Projection		Barcode	4043619670598
Rev	A	File No.	88467