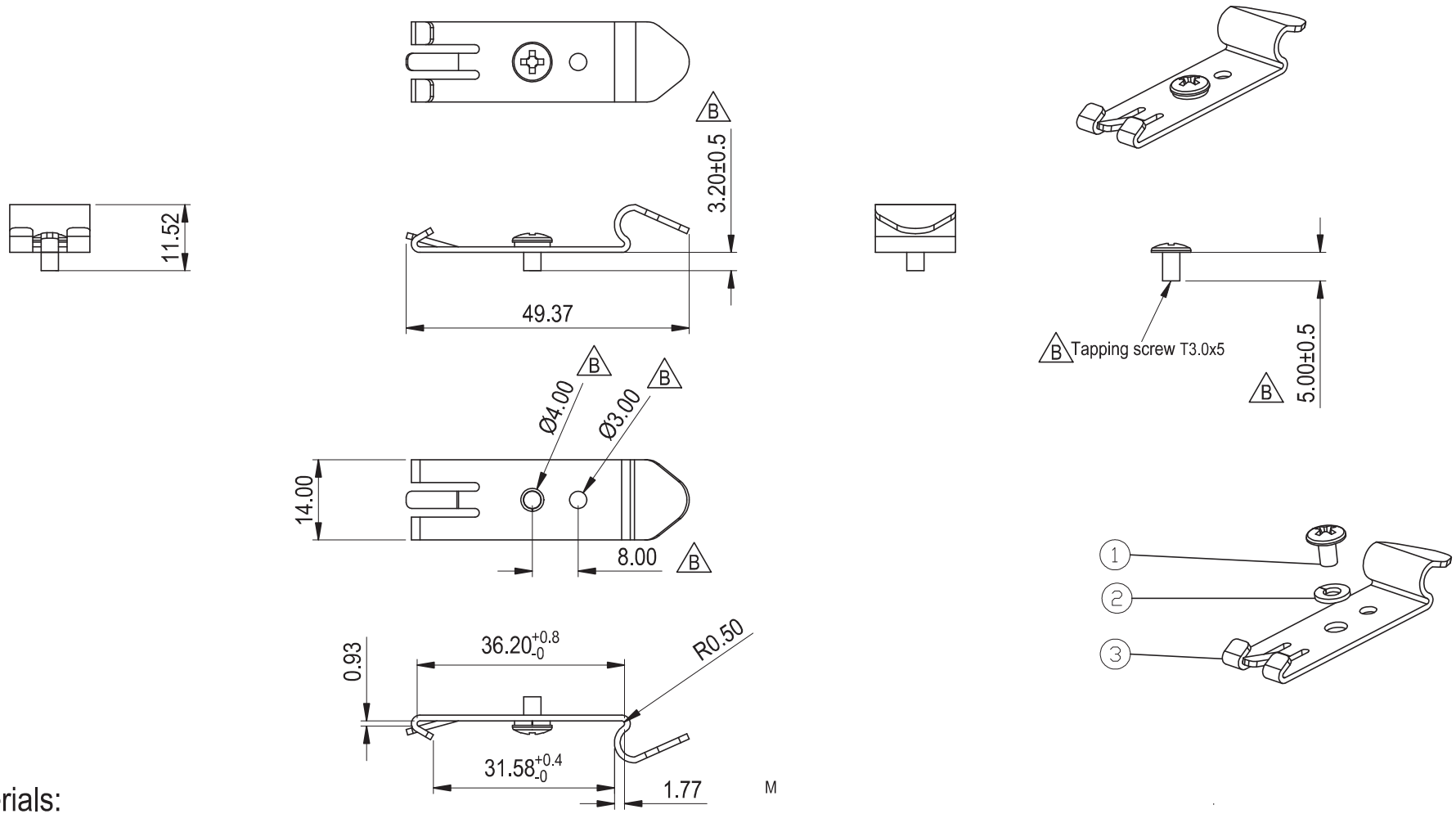


Materials:

(1)① Tapping screw-Iron blue zinc plating

(2)② Screw holdre-Iron blue zinc plating

(3)③ Stator-Stainless steel

DELOCK® we move the world

| | | | |
|---|---|---|---|
| Dat | 2024 / 05 / 30 | Title: Mounting holder for 35 mm DIN rail | |
| Unit | mm | Item no. | 67041 |
| Projection. | | Barcode | 4043619670413 |
| Rev | A | File No. | 88467 |